MICROWAVE CORPORATION v10.0410

HMC627LP5 / 627LP5E

0.5 dB LSB GaAs MMIC 6-BIT DIGITAL VARIABLE GAIN AMPLIFIER, 50 MHz - 1 GHz

RoHS EARTH FRIENDLY

Designer's Kit Available

Typical Applications

The HMC627LP5(E) is ideal for:

- Cellular/3G Infrastructure
- WiBro / WiMAX / 4G
- Microwave Radio & VSAT
- Test Equipment and Sensors
- IF & RF Applications

Features

-11.5 to 20 dB Gain Control in 0.5 dB Steps

Power-up State Selection

High Output IP3: +36 dBm

TTL/CMOS Compatible
Serial, Parallel, or latched Parallel Control

±0.25 dB Typical Gain Step Error

Single +5V Supply

32 Lead 5x5mm SMT Package: 25mm^2

Functional Diagram

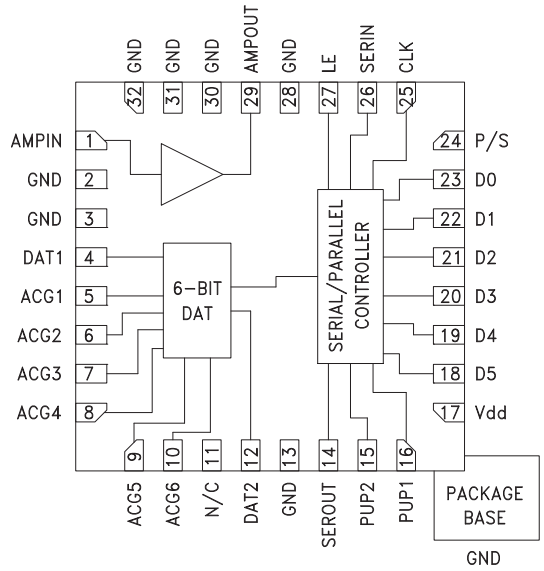

General Description

The HMC627LP5(E) is a digitally controlled variable gain amplifier which operates from 50 MHz to 1 GHz, and can be programmed to provide anywhere from 11.5 dB attenuation, to 20 dB of gain, in 0.5 dB steps. The HMC627LP5(E) delivers noise figure of 4.3 dB in its maximum gain state, with output IP3 of up to +36 dBm in any state. The dual mode gain control interface accepts either three wire serial input or 6 bit parallel word. The HMC627LP5(E) also features a user selectable power up state and a serial output for cascading other Hittite serially controlled components. The HMC627LP5(E) is housed in a RoHS compliant 5x5 mm QFN leadless package, and requires no external matching components.

Electrical Specifications, T_A = +25° C, 50 Ohm System Vdd = +5V, Vs= +5V

Parameter	Min.	Typ.	Max.	Min.	Typ.	Max.	Units
	50 - 350			350 - 1000			MHz
Gain (Maximum Gain State)	18	20		15	17.5		dB
Gain Control Range		31.5			31.5		dB
Input Return Loss		18			17		
Output Return Loss	20	12			12		dB
Gain Accuracy: (Referenced to Maximum Gain State) All Gain States	50 MHz -100MHz, 250 MHz - 350 MHz ± (0.2 + 3% of Gain Setting) Max 100 MHZ - 250 MHz ± (0.1 + 2% of Gain Setting) Max			± (0.3 + 3% of Gain Setting) Max			dB
Output Power for 1 dB Compression	18	20		16	20		dBm
Output Third Order Intercept Point (Two-Tone Input Power= 0 dBm Each Tone)	33	36		33	36		dBm
Noise Figure		4.3			4.3		dB
Switching Characteristics tRISE, tFall (10 / 90% RF) tON, tOFF (Latch Enable to 10 / 90% RF)		170 70			170 70		ns
Supply Current (Idd)		90	110		90	110	mA

0.5 dB LSB GaAs MMIC 6-BIT DIGITAL VARIABLE GAIN AMPLIFIER, 50 MHz - 1 GHz

Maximum Gain vs. Frequency [1]

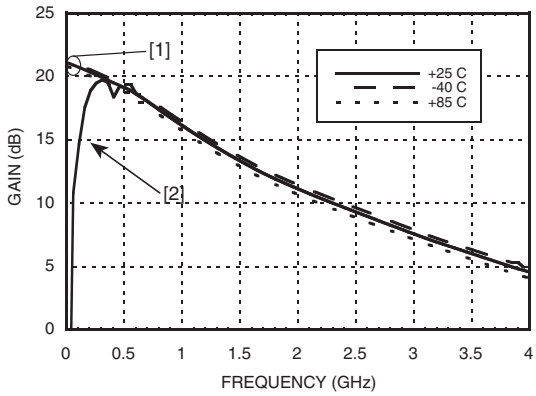

Normalized Attenuation vs. Frequency

(Only Major States are Shown)

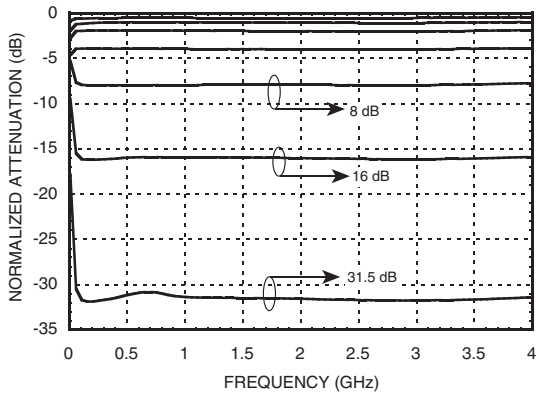

Input Return Loss [1]

(Only Major States are Shown)

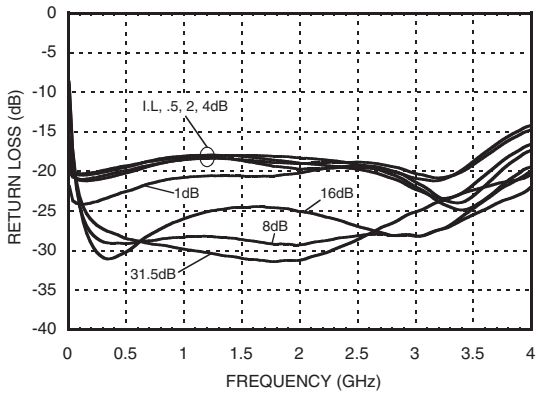

Output Return Loss [1]

(Only Major States are Shown)

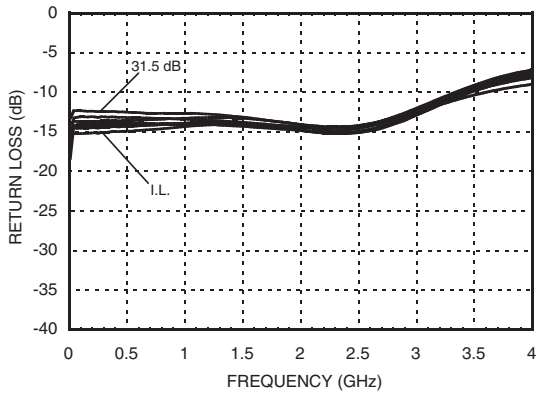

Input Return Loss [2]

(Only Major States are Shown)

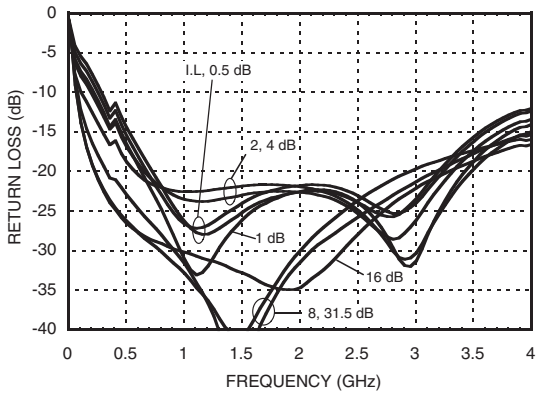

Output Return Loss [2]

(Only Major States are Shown)

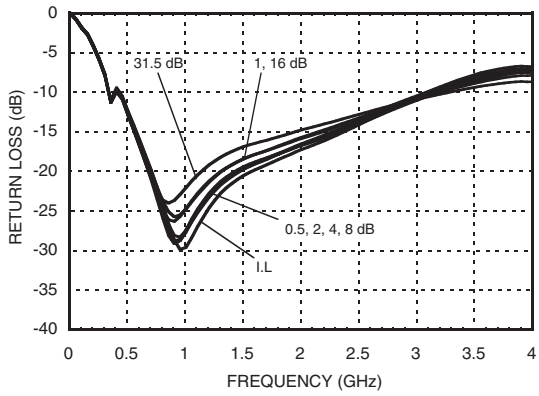

[1] Tested with broadband bias tee on RF ports and C1 = 10,000pF
[2] C1, C6 and C8 = 100pF, L1 = 270nF

Bit Error vs. Frequency [2]
(Only Major States are Shown)

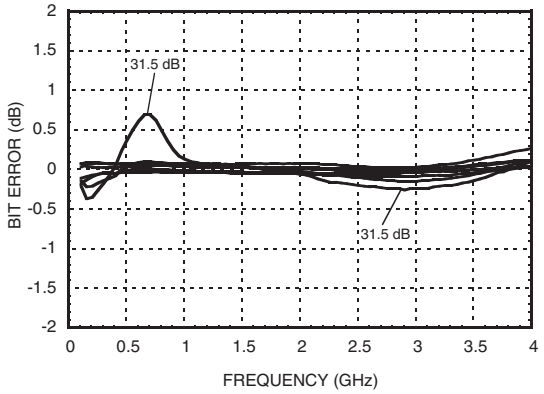

Bit Error vs. Attenuation State [2]

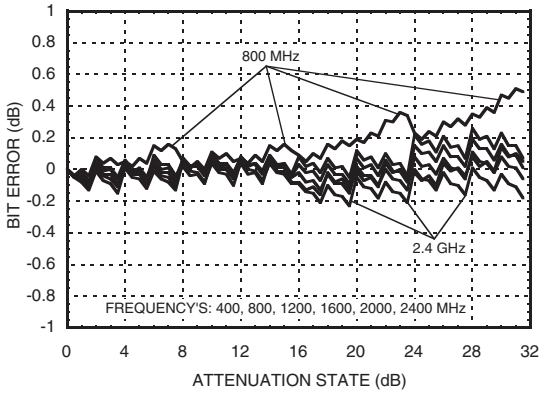

Normal Relative Phase vs. Frequency [2]
(Only Major States are Shown)

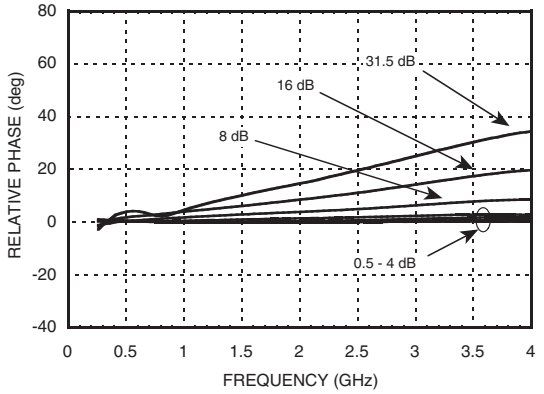

Step Error vs. Frequency [2]
(Only Major States are Shown)

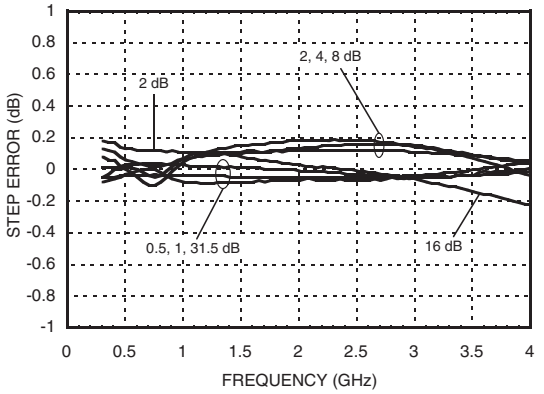

Maximum Gain vs. Frequency [3]

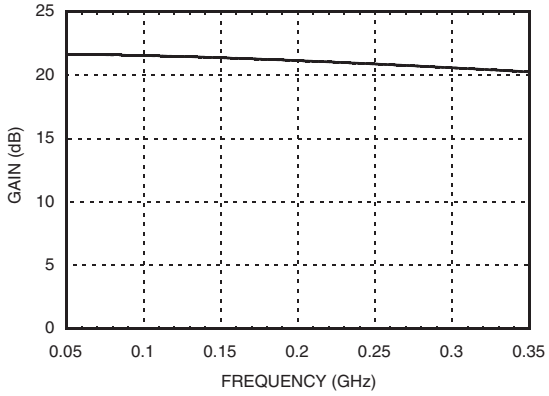

Normalized Attenuation vs. Frequency [3]

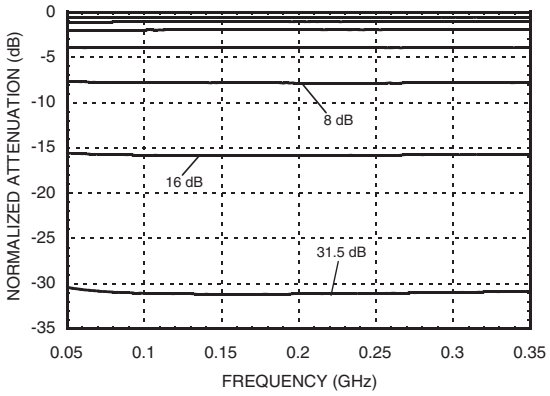

[1] Tested with broadband bias tee on RF ports and C1 = 10,000pF
[2] C1, C6 and C8 = 100pF, L1 = 270nF
[3] C1, C6, C8 = 3300pF; C3, C4 & C5 = 330pF; L1 = 560nH

For price, delivery and to place orders: Hittite Microwave Corporation, 20 Alpha Road, Chelmsford, MA 01824
Phone: 978-250-3343 Fax: 978-250-3373 Order On-line at www.hittite.com
Application Support: Phone: 978-250-3343 or apps@hittite.com

Input Return Loss [3]

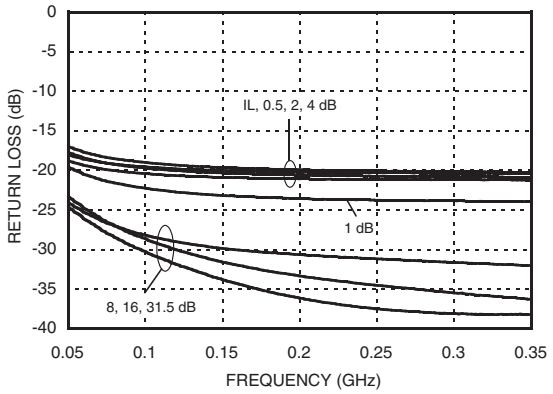

Output Return Loss [3]

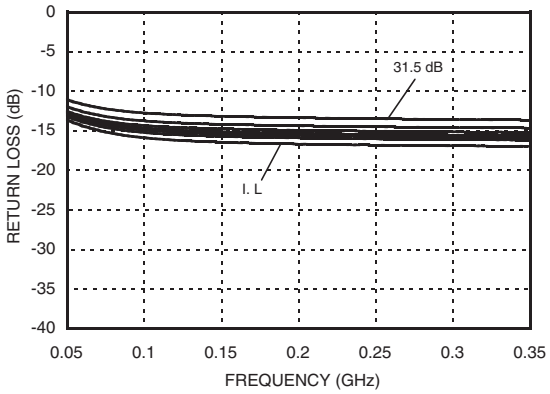

Bit Error vs. Frequency [3]

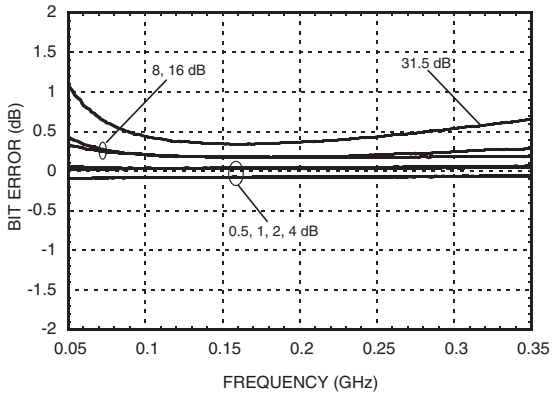

Bit Error vs. Attenuation State [3]

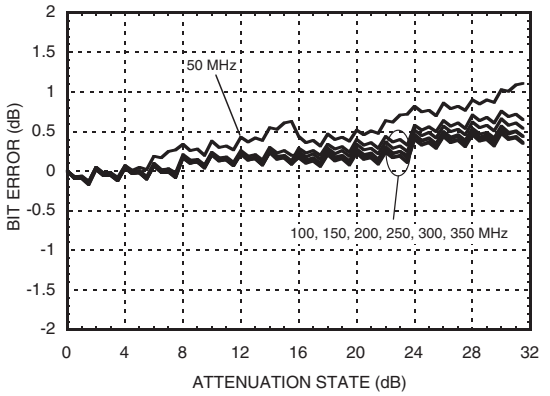

Normal Relative Phase vs. Frequency [3]

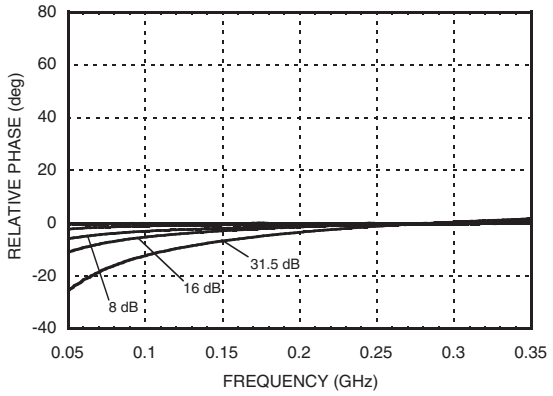

Step Error vs. Frequency [3]

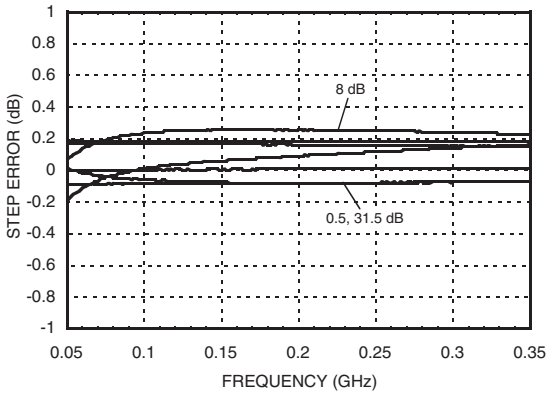

[3] C1, C6, C8 = 3300pF; C3, C4 & C5 = 330pF; L1 = 560nH

Serial Control Interface

The HMC627LP5(E) contains a 3-wire SPI compatible digital interface (SERIN, CLK, LE). It is activated when P/S is kept high. The 6-bit serial word must be loaded MSB first. The positive-edge sensitive CLK and LE requires clean transitions. If mechanical switches were used, sufficient debouncing should be provided. When LE is high, 6-bit data in the serial input register is transferred to the attenuator. When LE is high CLK is masked to prevent data transition during output loading.

When P/S is low, 3-wire SPI interface inputs (SERIN, CLK, LE) are disabled and serial input register is loaded asynchronously with parallel digital inputs (D0-D5). When Le is high, 6-bit parallel data is transferred to the attenuator.

For all modes of operations, the DVGA state will stay constant while LE is kept low.

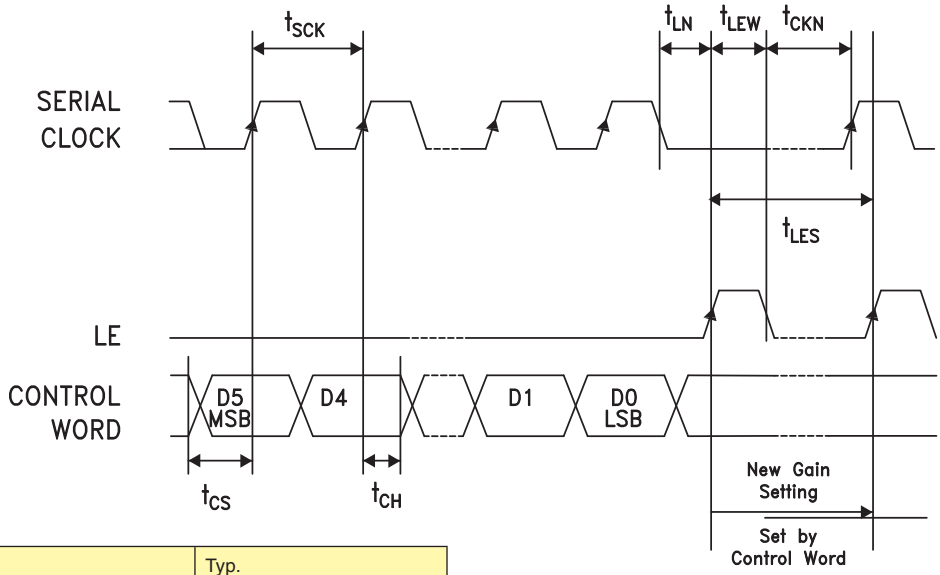

Parameter	Typ.
Min. serial period, t_{SCK}	100 ns
Control set-up time, t_{CS}	20 ns
Control hold-time, t_{CH}	20 ns
LE setup-time, t_{LN}	10 ns
Min. LE pulse width, t_{LEW}	10 ns
Min LE pulse spacing, t_{LES}	630 ns
Serial clock hold-time from LE, t_{CKN}	10 ns
Hold Time, $t_{PH.}$	0 ns
Latch Enable Minimum Width, t_{LEN}	10 ns
Setup Time, t_{PS}	2 ns

Timing Diagram *(Latched Parallel Mode)*

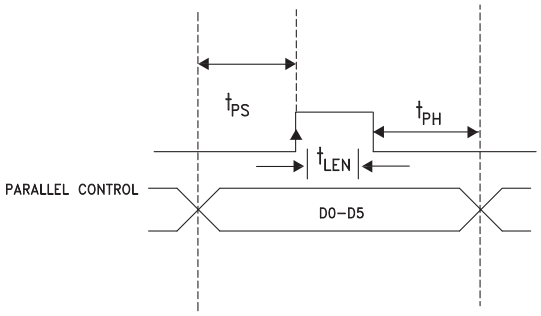

Parallel Mode *(Direct Parallel Mode & Latched Parallel Mode)*

Note: The parallel mode is enabled when P/S is set to low.

Direct Parallel Mode - The attenuation state is changed by the Control Voltage Inputs directly. The LE (Latch Enable) must be at a logic high to control the attenuator in this manner.

Latched Parallel Mode - The attenuation state is selected using the Control Voltage Inputs and set while the LE is in the Low state. The attenuator will not change state while LE is Low. Once all Control Voltage Inputs are at the desired states the LE is pulsed. See timing diagram above for reference.

Power-Up States

If LE is set to logic LOW at power-up, the logic state of PUP1 and PUP2 determines the power-up state of the part per PUP truth table. If the LE is set to logic HIGH at power-up, the logic state of D0-D5 determines the power-up state of the part per truth table. The DVGA latches in the desired power-up state approximately 200 ms after power-up.

Power-On Sequence

The ideal power-up sequence is: GND, Vdd, digital inputs, RF inputs. The relative order of the digital inputs are not important as long as they are powered after Vdd / GND

Absolute Maximum Ratings

RF Input Power [1]	11.5 dBm (T = +85 °C)
Digital Inputs ($\overline{\text{Reset}}$, Shift Clock, Latch Enable & Serial Input)	-0.5V to Vdd +0.5V
Bias Voltage (Vdd)	5.6V
Collector Bias Voltage (Vcc)	5.5V
Channel Temperature	150 °C
Continuous Pdiss (T = 85 °C) (derate 9 mW/°C above 85 °C) [1]	0.593 W
Thermal Resistance	110 °C/W
Storage Temperature	-65 to +150 °C
Operating Temperature	-40 to +85 °C

[1] At max gain settling

Bias Voltage

Vdd (V)	Idd (Typ.) (mA)
+5	2
Vs (V)	Is (mA)
+5	88

ELECTROSTATIC SENSITIVE DEVICE
OBSERVE HANDLING PRECAUTIONS

PUP Truth Table

LE	PUP1	PUP2	Gain Relative to Maximum Gain
0	0	0	-31.5
0	1	0	-24
0	0	1	-16
0	1	1	Insertion Loss
1	X	X	0 to -31.5 dB

Note: The logic state of D0 - D5 determines the power-up state per truth table shown below when LE is high at power-up.

Truth Table

Control Voltage Input						Gain Relative to Maximum Gain
D5	D4	D3	D2	D1	D0	
High	High	High	High	High	High	0 dB
High	High	High	High	High	Low	-0.5 dB
High	High	High	High	Low	High	-1 dB
High	High	High	Low	High	High	-2 dB
High	High	Low	High	High	High	-4 dB
High	Low	High	High	High	High	-8 dB
Low	High	High	High	High	High	-16 dB
Low	Low	Low	Low	Low	Low	-31.5 dB
Any combination of the above states will provide a reduction in gain approximately equal to the sum of the bits selected.						

Control Voltage Table

State	Vdd = +3V	Vdd = +5V
Low	0 to 0.5V @ <1 µA	0 to 0.8V @ <1 µA
High	2 to 3V @ <1 µA	2 to 5V @ <1 µA

MICROWAVE CORPORATION v10.0410

RoHS EARTH FRIENDLY

0.5 dB LSB GaAs MMIC 6-BIT DIGITAL VARIABLE GAIN AMPLIFIER, 50 MHz - 1 GHz

Outline Drawing

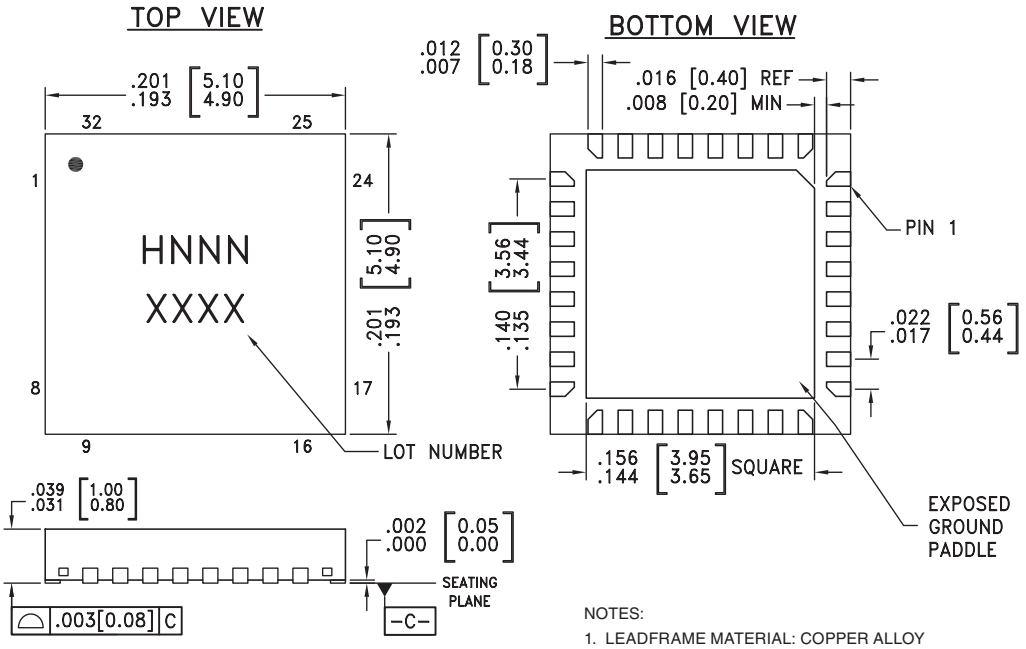

NOTES:
1. LEADFRAME MATERIAL: COPPER ALLOY
2. DIMENSIONS ARE IN INCHES [MILLIMETERS]
3. LEAD SPACING TOLERANCE IS NON-CUMULATIVE.
4. PAD BURR LENGTH SHALL BE 0.15mm MAXIMUM. PAD BURR HEIGHT SHALL BE 0.05mm MAXIMUM.
5. PACKAGE WARP SHALL NOT EXCEED 0.05mm.
6. ALL GROUND LEADS AND GROUND PADDLE MUST BE SOLDERED TO PCB RF GROUND.
7. REFER TO HITTITE APPLICATION NOTE FOR SUGGESTED LAND PATTERN.

Package Information

Part Number	Package Body Material	Lead Finish	MSL Rating	Package Marking [3]
HMC627LP5	Low Stress Injection Molded Plastic	Sn/Pb Solder	MSL1 [1]	H627 XXXX
HMC627LP5E	RoHS-compliant Low Stress Injection Molded Plastic	100% matte Sn	MSL1 [2]	H627 XXXX

[1] Max peak reflow temperature of 235 °C
[2] Max peak reflow temperature of 260 °C
[3] 4-Digit lot number XXXX

For price, delivery and to place orders: Hittite Microwave Corporation, 20 Alpha Road, Chelmsford, MA 01824
Phone: 978-250-3343 Fax: 978-250-3373 Order On-line at www.hittite.com
Application Support: Phone: 978-250-3343 or apps@hittite.com

Pin Descriptions

Pin Number	Function	Description	Interface Schematic
1	AMPIN	This pin is DC coupled. An off chip DC blocking capacitor is required.	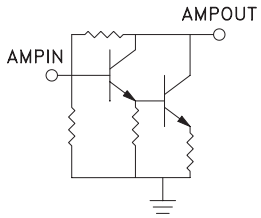
29	AMPOUT	RF output and DC bias (Vcc) for the output stage of the amplifier.	
2, 3, 13, 28, 30 - 32	GND	These pins and package bottom must be connected to RF/DC ground.	
4, 12	ATTIN, ATTOUT	These pins are DC coupled and matched to 50 Ohms. Blocking capacitors are required. Select value based on lowest frequency of operation.	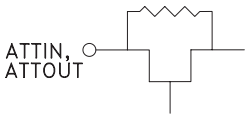
5 - 10	ACG1 - ACG6	External capacitors to ground is required. Select value for lowest frequency of operation. Place capacitor as close to pins as possible.	
11	N/C	No Connection	
14	SEROUT	Serial input data delayed by 6 clock cycles.	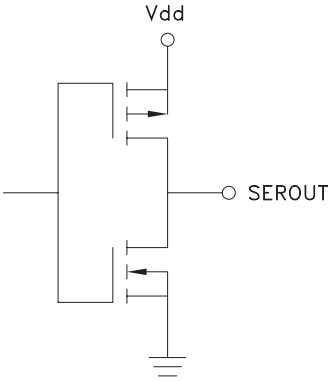
15, 16	PUP2, PUP1		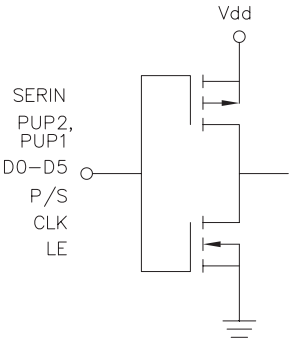
18 - 23	D5, D4, D3, D2, D1, D0		
24	P/S		
25	CLK		
26	SERIN		
27	LE		
17	Vdd	Supply Voltage	

0.5 dB LSB GaAs MMIC 6-BIT DIGITAL VARIABLE GAIN AMPLIFIER, 50 MHz - 1 GHz

Application Circuit

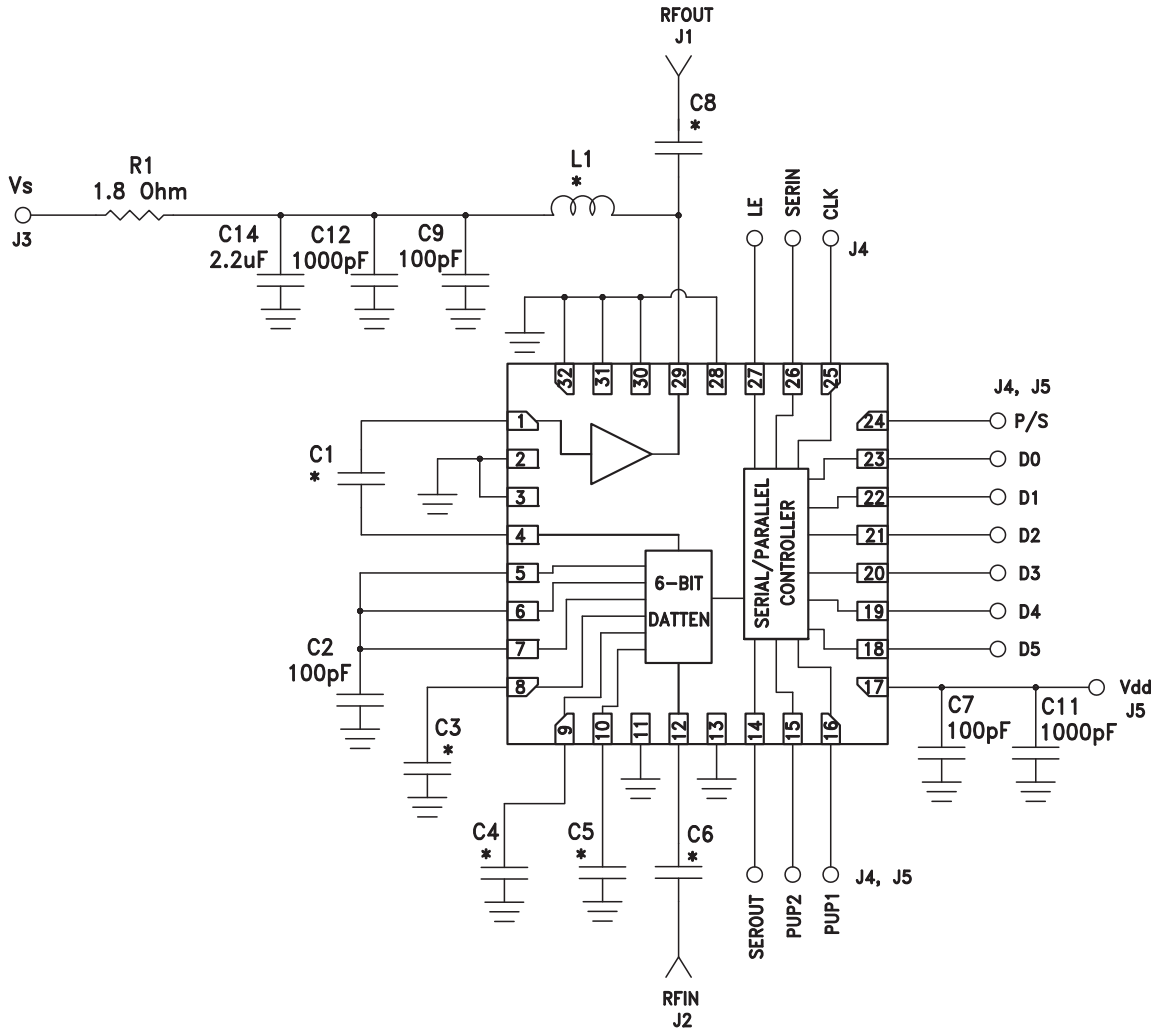

Components for Selected Frequencies

Tuned Frequency	50 -350 MHz	350 - 1000 MHz
Evaluation PCB	121394	118329
C1, C6, C8	3300pF	100pF
C3, C4, C5	330pF	100pF
L1	560nH	270nH

For price, delivery and to place orders: Hittite Microwave Corporation, 20 Alpha Road, Chelmsford, MA 01824
Phone: 978-250-3343 Fax: 978-250-3373 Order On-line at www.hittite.com
Application Support: Phone: 978-250-3343 or apps@hittite.com

Evaluation PCB

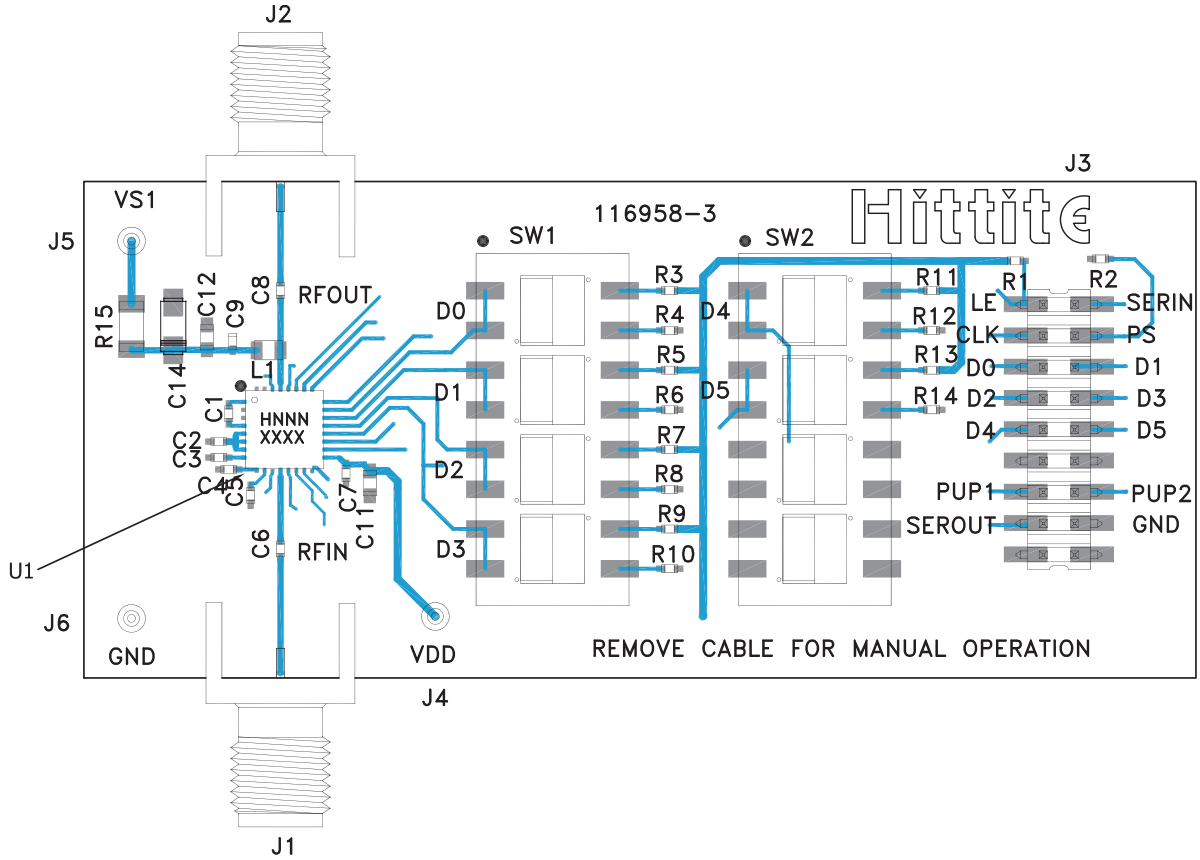

List of Materials for Evaluation [3]

Item	Description
J1 - J2	PCB Mount SMA Connectors
J3	18 Pin DC Connector
J4 - J6	DC Pin
C1, C3 - C6, C8	Capacitor, 0402 Pkg.[3]
C2, C7. C9	100pF Capacitor. 0402 Pkg.
C11 - C12	1000 pF Capacitor, 0402 Pkg.
C14	2.2 µF Capacitor, CASE A Pkg.
R1 - R14	100 kOhm Resistor, 0402 Pkg.
R15	1.8 Ohm Resistor, 1206 Pkg.
L1	Inductor, 0603 Pkg. [3]
SW1, SW2	SPDT 4 Position DIP Switch
U1	HMC627LP5(E) Variable Gain Amplifier
PCB [2]	116958 Evaluation PCB

[1] Reference this number when ordering complete evaluation PCB
[2] Circuit Board Material: Arlon 25FR, FR4
[3] Please reference Components for Selected Frequencies Table

The circuit board used in the application should use RF circuit design techniques. Signal lines should have 50 Ohm impedance while the package ground leads and exposed paddle should be connected directly to the ground plane similar to that shown. A sufficient number of via holes should be used to connect the top and bottom ground planes. The evaluation circuit board shown is available from Hittite upon request.

For price, delivery and to place orders: Hittite Microwave Corporation, 20 Alpha Road, Chelmsford, MA 01824
Phone: 978-250-3343 Fax: 978-250-3373 Order On-line at www.hittite.com
Application Support: Phone: 978-250-3343 or apps@hittite.com